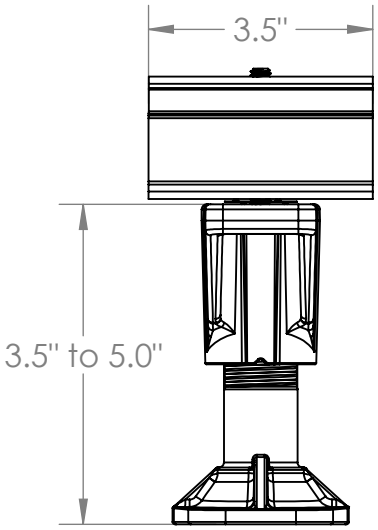

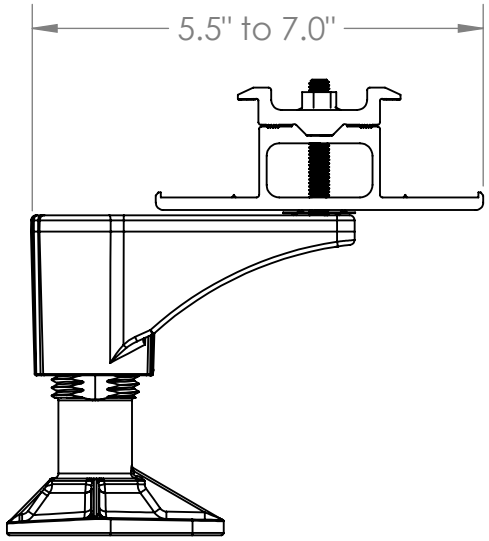

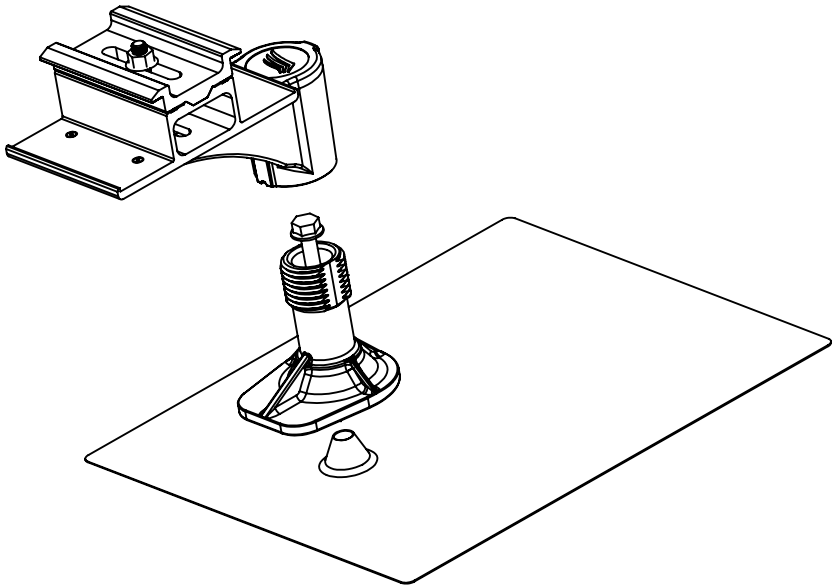

PROPRIETARY AND CONFIDENTIAL

THE INFORMATION CONTAINED IN THIS DRAWING IS THE SOLE PROPERTY OF PEGASUS SOLAR INC. ANY REPRODUCTION IN PART OR AS A WHOLE WITHOUT THE WRITTEN PERMISSION OF PEGASUS SOLAR INC IS PROHIBITED.

Comments:

Single Mount Mass = 1.81 lbs

Lag Screw Mass = 0.09 lbs

Flashing Mass = 0.84 lbs

PEGASUS SOLAR

CONFIDENTIAL

TITLE:

Comp Mount, Single
35mm or 40mm

PART NUMBER: PSCM-xxS

SIZE	REV	DRAWN: NW	SCALE: 1:3
A	A	CHECKED: EKS	SHEET: 1 OF 1

5 4 3 2 1