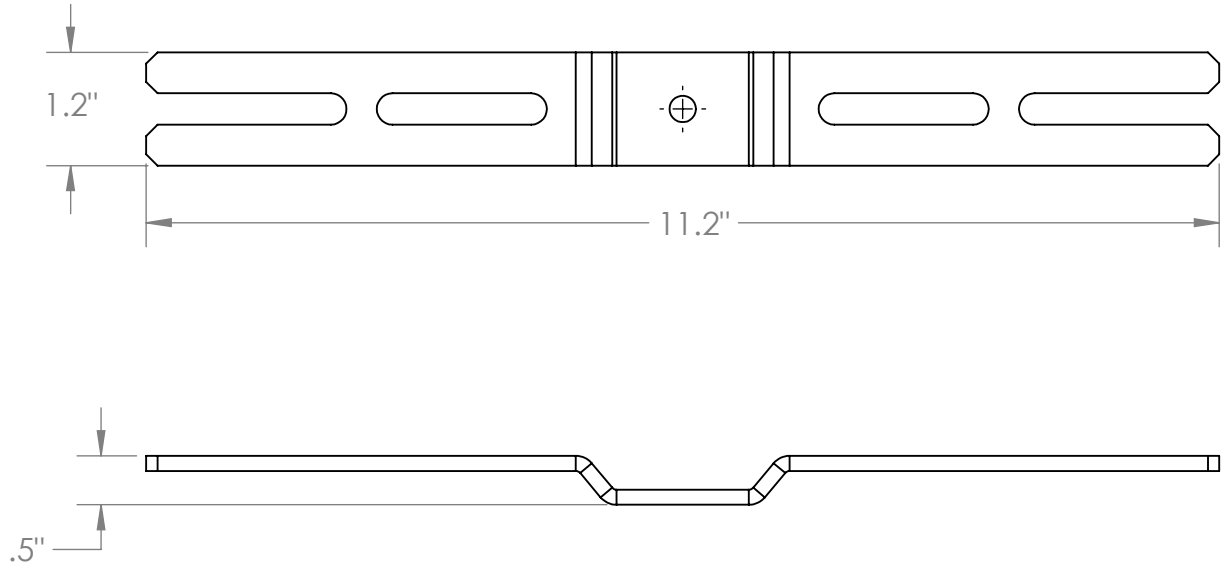

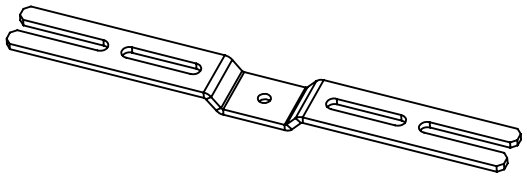

PROPRIETARY AND CONFIDENTIAL

THE INFORMATION CONTAINED IN THIS DRAWING IS THE SOLE PROPERTY OF PEGASUS SOLAR INC. ANY REPRODUCTION IN PART OR AS A WHOLE WITHOUT THE WRITTEN PERMISSION OF PEGASUS SOLAR INC IS PROHIBITED.

Comments:

Mass = 0.2 lbs

PEGASUS SOLAR

CONFIDENTIAL

TITLE:

Junction Box Bracket, AL Mill

PART NUMBER: PSUA-JM

SIZE	REV	DRAWN: NW	SCALE: 1:2
A	A	CHECKED: EKS	SHEET: 1 OF 1

5 4 3 2 1