Starling Madison Lofquist, Inc.
Consulting Structural and Forensic Engineers
5224 South 39th Street, Phoenix, Arizona 85040
tel: (602) 438-2500 fax: (602) 438-2505 ROC#291316 www.smleng.com

Pegasus Solar
100 West Ohio Avenue
Richmond, CA 94804

July 24, 2019

Attn: Mr. Kai Stephan, CEO

Subject: **Pegasus Solar™ Open & Closed Slot L-Foot Allowable Loads**

SML Job No.: 182-15

Dear Mr. Stephan:

We have analyzed the Pegasus Solar™ Open & Closed Slot L-Foot roof mount systems and determined that, for the configurations and criteria described below, it is in compliance with the applicable sections of the following reference documents:

Codes: ASCE/SEI 7-05 & 7-10 Min. Design Loads for Buildings & Other Structures
International Building Code 2009, 2012 & 2015 Editions
International Residential Building Code 2009, 2012 & 2015 Editions
Other: Aluminum Design Manual, ADM 2010 & 2015 Editions

This letter is to address the use and allowable loads for the Pegasus Solar™ Open Slot & Closed Slot L-Foot as shown in diagrams LF1-LF4 below. We have reviewed the test data for the Closed Slot L-Foot prepared by Applied Materials & Engineering (AME), tested September 20, 2017, and for the Open Slot L-Foot prepared by Applied Materials & Engineering (AME), project no. 1190303C, dated May 8, 2019, as well as, typical loading and anchorage conditions for common rail type solar racking systems. We have determined that, subject to the limitations outlined below, the Pegasus Solar™ Open Slot & Closed Slot L-Foot systems are suitable for most rooftop solar racking systems.

The primary structural element of the mount is a standard 5/16" dia. by 4 1/2 inch long stainless steel lag screw. The lag screw is intended to be anchored into a timber roof joist or truss with a minimum embedment of 2 inches. The AME tests simulated this configuration using 1/2" structural I plywood and a 2x4 DF-L member. The AME report indicates the failure mode for the Pegasus Solar™ Open Slot L-Foot is the slippage of the M10 bolt for tension and fracture of the cast part for shear loading; while the failure mode for the Pegasus Solar™ Closed Slot L-Foot is the fracture of the cast part for both tension and shear.

Pegasus Solar™ Open Slot L-Foot:
The allowable load for pullout (uplift) and lateral shear for anchorage in Doug Fir timber with a specific gravity (G) of 0.50 and other woods with varying specific gravities are as follows:

Table 1. Pegasus Solar Open Slot L-Foot Allowable Capacities (1)

Wood Species	NDS Assigned Specific Gravity (2)	Allowable Uplift Capacity (lb) (3)	Allowable Shear Capacity (lb) (3)
Douglas Fir, Larch	0.50	803	472
Douglas Fir, South	0.46	708	453
Hem, Fir	0.43	640	438
Hem, Fir (North)	0.46	708	453
Southern Pine	0.55	926	495
Spruce, Pine, Fir	0.42	618	434

(1) The minimum size rafter/truss top chord is 2x4.
(2) The listed specific gravity is per 2015 NDS Table 12.3.3A
(3) Values are based on securing lag bolt within center 1/3 of rafter/top chord width with a minimum 2.5" edge distance, and lateral loading direction down slope.

The values provided above, see table 1, were developed by taking the lowest of three tests divided by a factor of safety of 2.0 for bolt slippage and part fracture. These values do not include any additional increases or load factors, and it is up to the end user to determine any increases permissible by the code. The tension test load was applied at the top of the slot and the shear test load was applied at 3" above the bearing surface. Any adverse effects due to additional height or eccentricity of connected components shall be considered by the end user of this letter.

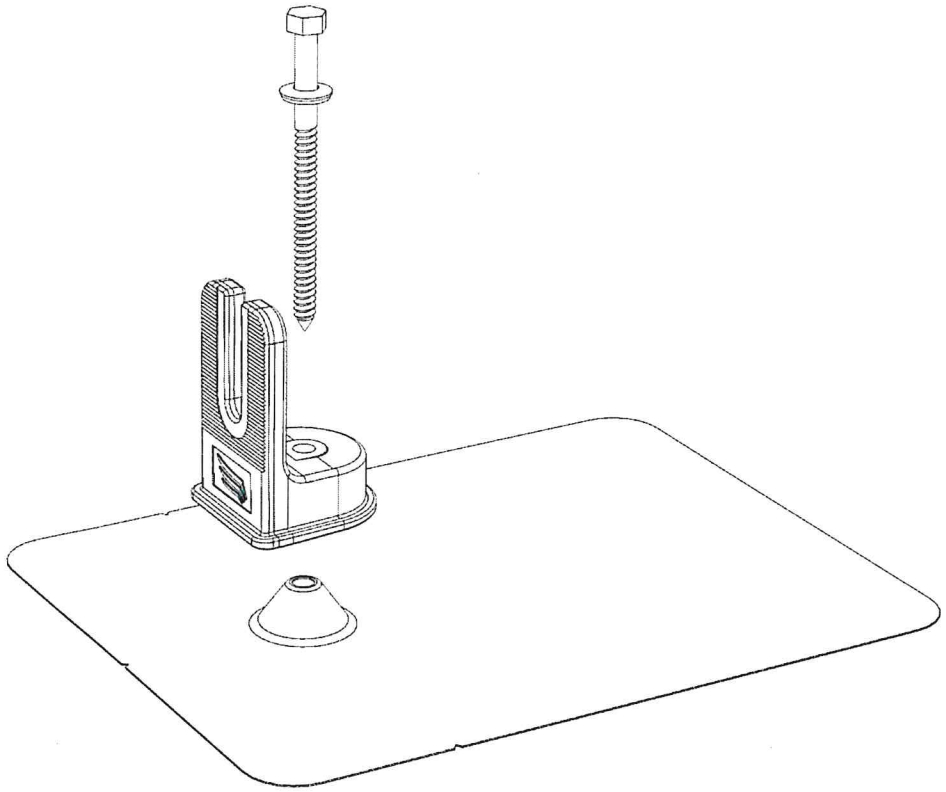

Diagram LF1: Pegasus Solar™ Open Slot L-Foot.

The Pegasus Solar™ Open Slot L-Foot as shown in diagram LF2 below mounted to the top of the Pegasus Tile Replace Mount is an acceptable installation and use of the L-Foot. When the Pegasus L-Foot is attached to the Pegasus Tile Replace Mount and not directly to the wood member, the Tile Replace Mount becomes the limiting factor in all directions. When installing in this manner refer to the "Pegasus Solar Tile Replace for Rails PE Certification Letter" for specific capacities.

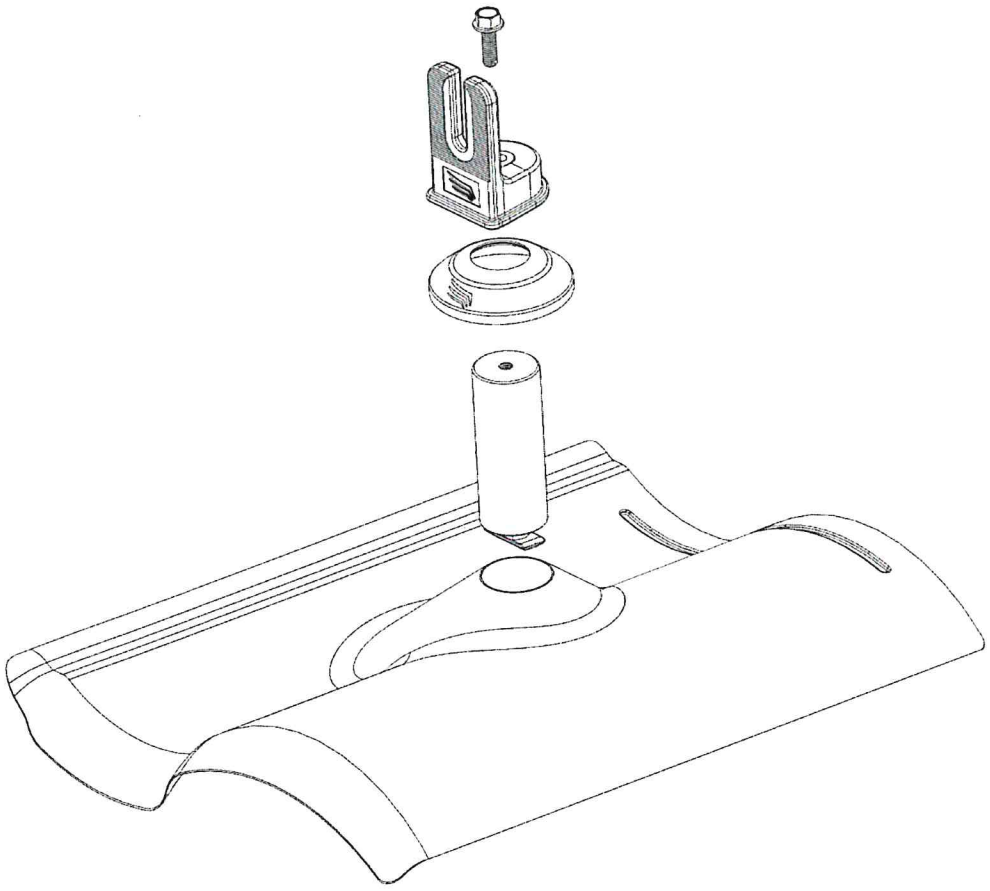

Diagram LF2: Pegasus Solar™ Open Slot L-Foot on Pegasus Tile Replace Mount.

Pegasus Solar™ Closed Slot L-Foot:
The allowable load for pullout (uplift) and lateral shear for anchorage in Doug Fir timber with a specific gravity (G) of 0.50 and other woods with varying specific gravities are as follows:

Table 2. Pegasus Solar Closed Slot L-Foot Allowable Capacities (1)

Wood Species	NDS Assigned Specific Gravity (2)	Allowable Uplift Capacity (lb) (3)	Allowable Shear Capacity (lb) (3)
Douglas Fir, Larch	0.50	1254	472
Douglas Fir, South	0.46	1107	453
Hem, Fir	0.43	1000	438
Hem, Fir (North)	0.46	1107	453
Southern Pine	0.55	1447	495
Spruce, Pine, Fir	0.42	965	434

(1) The minimum size rafter/truss top chord is 2x4.
(2) The listed specific gravity is per 2015 NDS Table 12.3.3A
(3) Values are based on securing lag bolt within center 1/3 of rafter/top chord width with a minimum 2.5" edge distance, and lateral loading direction down slope.

The values provided above, see table 2, were developed by taking the lowest of three tests divided by a factor of safety of 2.0 for aluminum rupture failure. Additionally, there was a slight modification of the part to decrease the thickness of the vertical serrated portion of the L-Foot after the AME test was completed. This reduced section was accounted for by reducing the tested results by a factor equal to the new cross-sectional area divided by the original cross-sectional area. This resulted in a reduction of 11% from that determined by the AME test. These values do not include any additional increases or load factors, and it is up to the end user to determine any increases permissible by the code. The tension test load was applied at the top of the slotted hole and the shear test load was applied at 3" above the bearing surface (please note that the lower Open Slot shear allowable capacity has been presented in the above table for the Closed Slot shear allowable capacity, which is slightly conservative). Any adverse effects due to additional height or eccentricity of connected components shall be considered by the end user of this letter.

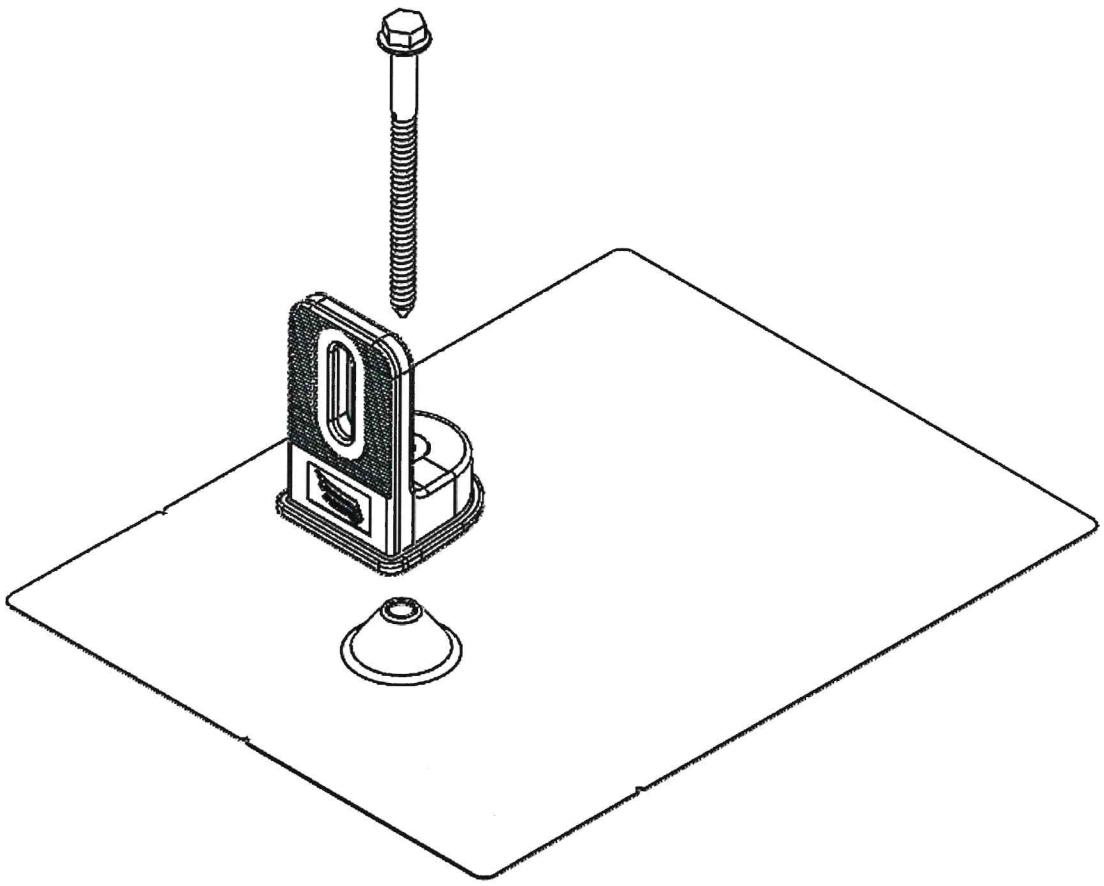

Diagram LF3: Pegasus Solar™ Closed Slot L-Foot.

The Pegasus Solar™ Closed Slot L-Foot as shown in diagram LF4 below mounted to the top of the Pegasus Tile Replace Mount is an acceptable installation and use of the L-Foot. When the Pegasus L-Foot is attached to the Pegasus Tile Replace Mount and not directly to the wood member, the Tile Replace Mount becomes the limiting factor in all directions. When installing in this manner refer to the "Pegasus Solar Tile Replace for Rails PE Certification Letter" for specific capacities.

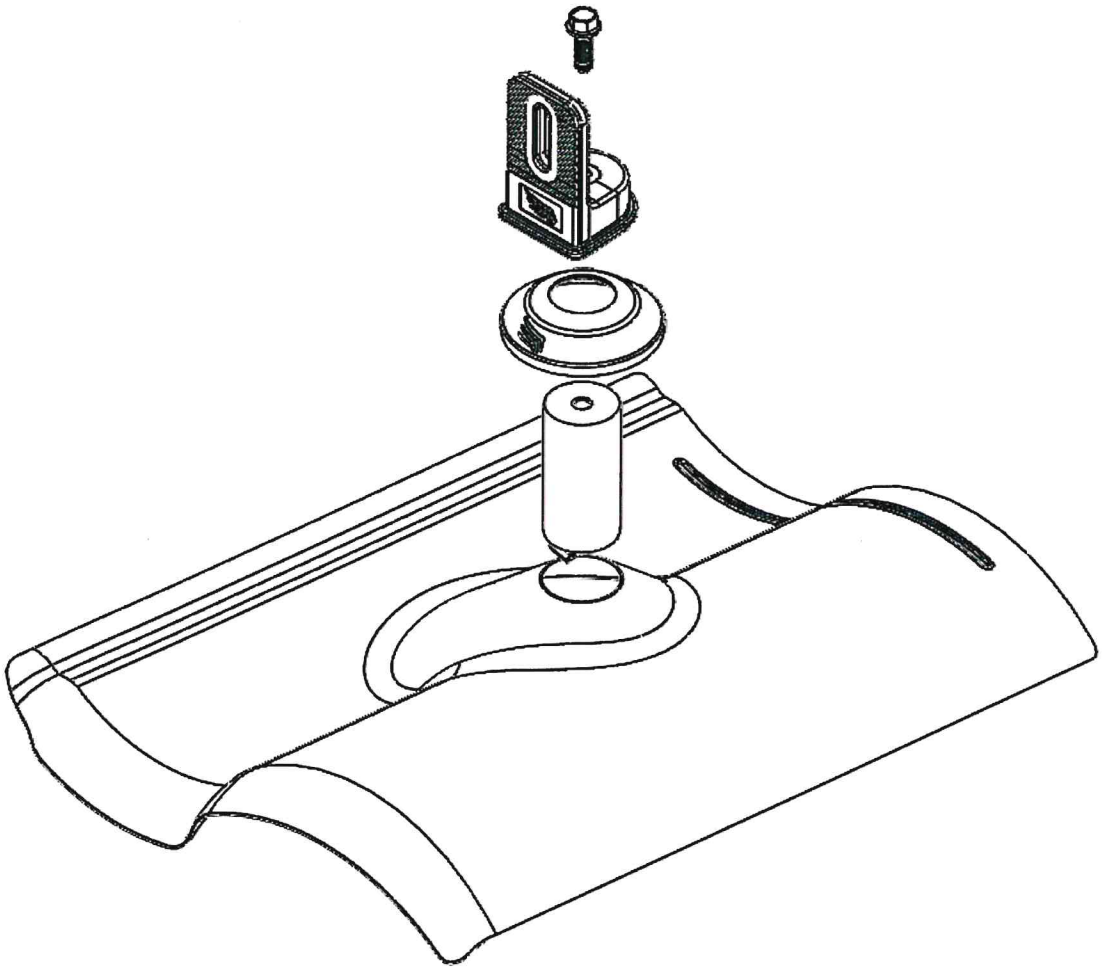

Diagram LF4: Pegasus Solar™ Closed Slot L-Foot on Pegasus Tile Replace Mount.

Notes – Tested values are based on the following criteria:

1. 2.0" minimum penetration of lag screw into 2x roof framing, excluding the tapered tip portion.
2. PV panel must comply with mechanical load requirements of UL 1703 OR 2703.

Our analysis assumes that the connections and associated hardware are installed in a workmanlike manner in accordance with the Pegasus Solar™ Open Slot & Closed Slot L-Foot Mount Installation Manual, the rail manufacturer's Installation Manual and generally accepted standards of construction practice. It is the responsibility of the contractor to verify that the strength of the roof framing meets the minimum properties used in the tests and can safely support the maximum imposed loads stated within this document. Starling Madison Lofquist, Inc. and Pegasus Solar™ assume no liability beyond what is specifically shown in this letter. Additional information is available at the Pegasus Solar™ web site, http://pegasussolar.com/

Please feel free to contact me at your convenience if you have any questions.

Respectfully yours,

Jesse Light, S.E.
Sr. Structural Engineer